E 59

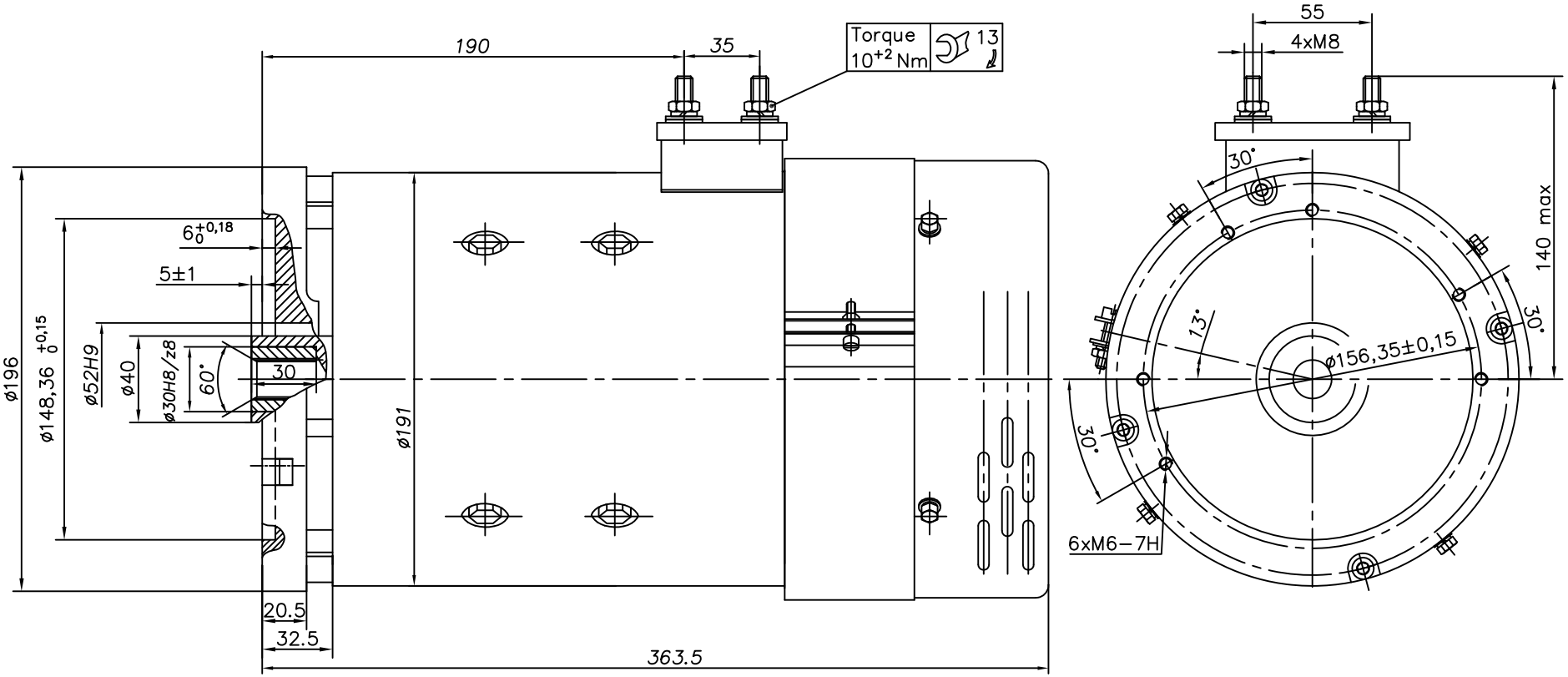

ETH 8,6/4,8/38

0 41 33 8000

rated power	8,6kW
rated voltage	48 V
rated current	230A
rated speed	3800 min^{-1}
operation mode	S2−60 min
excitation	indep.
protection	IP 21
insulation	F
weight	
char. curve	

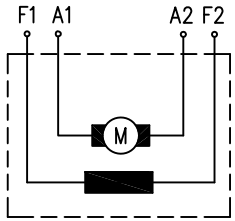

SPLINE DETAIL

19 Teeth equally spaced
24/48 Pitch
.9449/.1.8898 Wide
.772/.767 Inside diameter
.859/..850 Outside
45° Pressure angle

NB: 1. Coating RAL 9011 (black)

Rotation (viewed from drive end)
CCW: F1 → ⊕; F2 → ⊖; | A1 → ⊕; A2 → ⊖;
CW: F1 → ⊖; F2 → ⊕;

KOSTOV MOTORS
ETH 8,6/4,8/38
excit. INDEP
IP 21 insulation F
kW 8,6 A 230 V 48 duty S2−60min
rpm 3800 kg S.N:
www.kostov - motors.com
CE

24.11.2009	
07.08.2008	
11.07.2008	
Rev.	

KOSTOV MOTORS
Balkancar
"G.Kostov"JSC