E 24B1

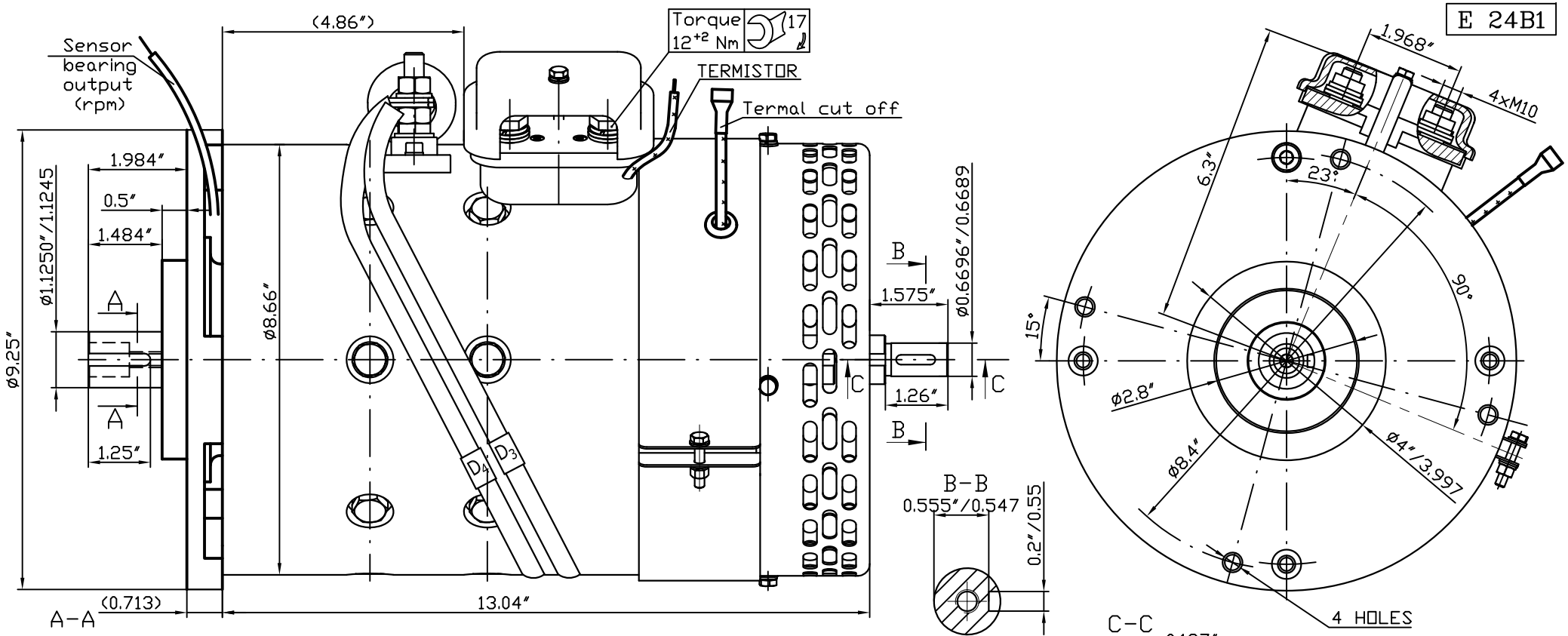


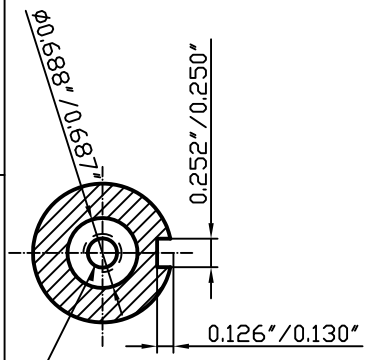


5/16"-18-UNC-2B
0.750 DEEP

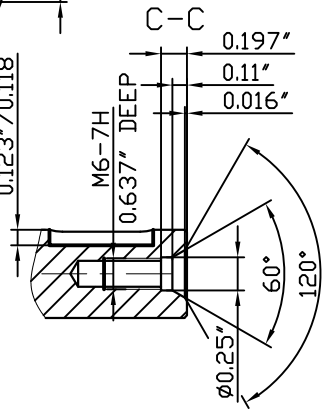


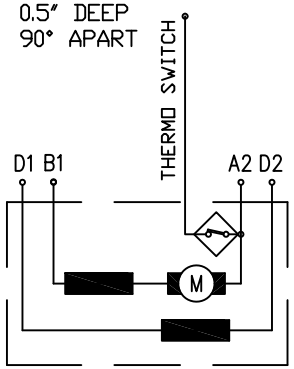


# KOSTOV 9" 168V
## 17R-31749

| Duty cycle | Field mode | Volts | Amps | RPM | kW | HP | Peak HP | Torque |
|---|---|---|---|---|---|---|---|---|
| S2-60min | series | 115 | 176 | 4000 | 16.9 | 22.5 | 70.0 | 40.0 |
| S2-60min | series | 139 | 176 | 4900 | 20.6 | 27.5 | 85.0 | 40.0 |
| S2-60min | series | 160 | 176 | 5600 | 23.8 | 31.7 | 100.0 | 40.0 |
| S2-60min | parallel | 80 | 176 | 4000 | 11.7 | 15.6 | 50.0 | 28.0 |
| S2-60min | parallel | 96 | 176 | 4800 | 13.9 | 18.5 | 55.0 | 28.0 |
| S2-60min | parallel | 115 | 176 | 5700 | 16.6 | 22.1 | 85.0 | 28.0 |

The motor can be used with 80-120V in series mode also which will keep the torque at 40Nm but rpm will be too low.
It is a matter of personal driving preferences.

Rotation (viewed from drive end)
CCW: Connect D2 to A2; " + " to D1 and " - " to B1
CW: Connect D1 to A2; " + " to D2 and " - " to B1

Coating: black

| | |
|---|---|
| rated power | 24 kW |
| rated voltage | 168 V |
| rated current | 176 A |
| rated speed | 5600 $min^{-1}$ |
| operation mode | S2-60min |
| excitation | series |
| protection | IP 21 |
| insulation | H |
| Interpoles: | YES |

KOSTOV MOTORS
KOSTOV 9" 168 V
excit. SERIES
IP 21 insulation H
kW 24 A 176 V 168 duty S2-60min
rpm 5600 kg S.N:
www.kostov - motors.com

| Rev. | |
|---|---|
| 09.04.2009 | |
| 20.11.2008 | |
| 30.10.2008 | |

KOSTOV MOTORS
Balkancar "G.Kostov"JSC