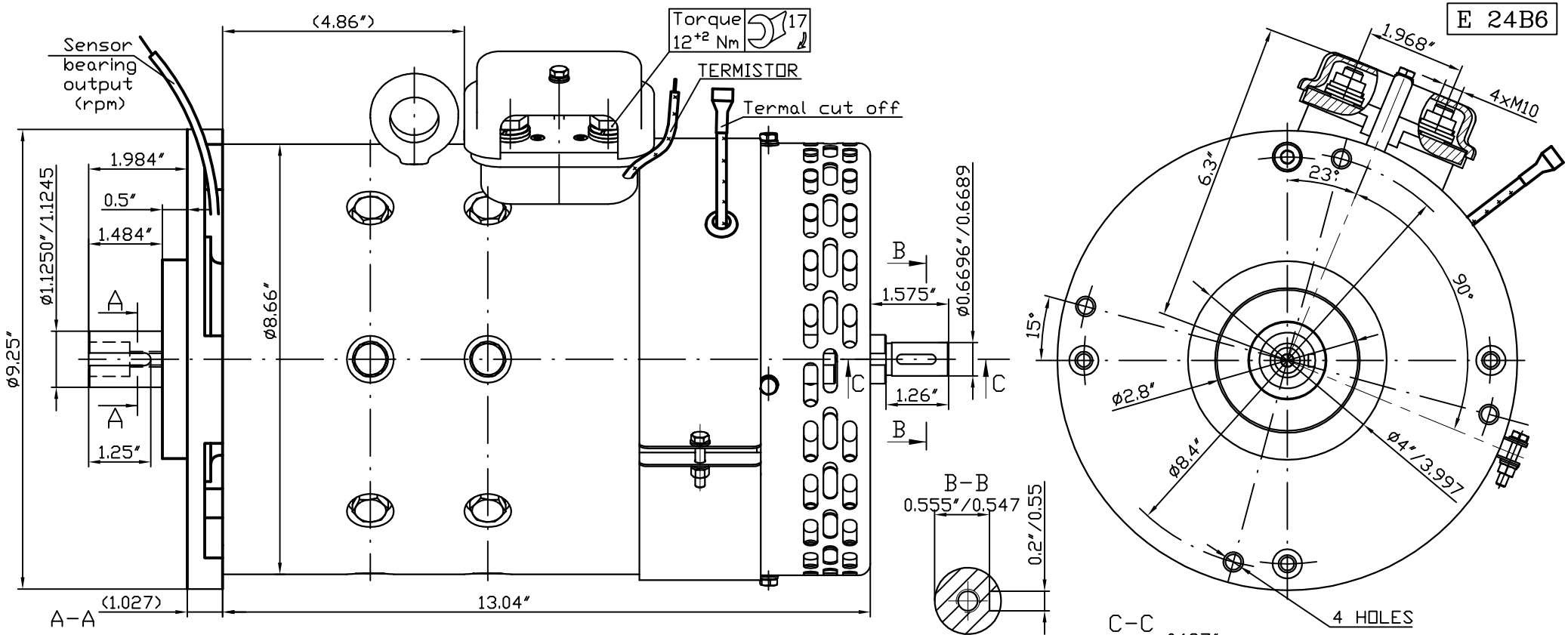

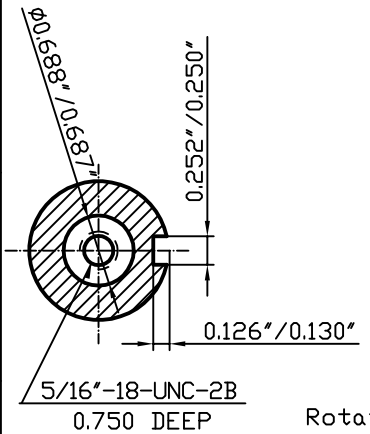

KOSTOV 9" 168V-SepEx
R17-32085

rated power	24 kW
rated voltage	168 V
rated current	176 A
rated speed	5600 min^{-1}
operation mode	S2-60min
excitation	indep
protection	IP 21
insulation	H
interpoles	YES
weight	
length L	
char. curve	
rotation	rev

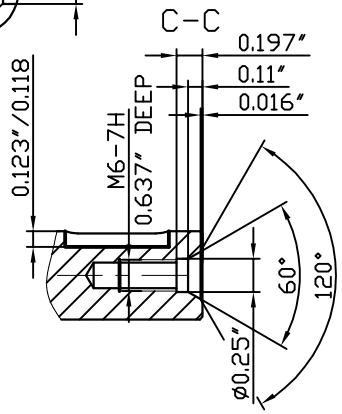

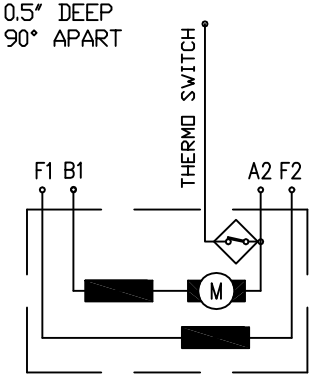

Rotation (viewed from drive end)

CCW: F1→⊕; F2→⊖;

CW: F1→⊖; F2→⊕;

⊕ to B1 ⊖ to A2

Coating: black

KOSTOV MOTORS
KOSTOV 9" 168 V
excit. indep
IP 21 insulation H
kW 24 A 176 V 168 duty S2-60min
rpm 5600 kg S.N:
www.kostov - motors.com

01.12.2009	
29.10.2009	
Rev.	

KOSTOV MOTORS Balkancar "G.Kostov"JSC