C 33

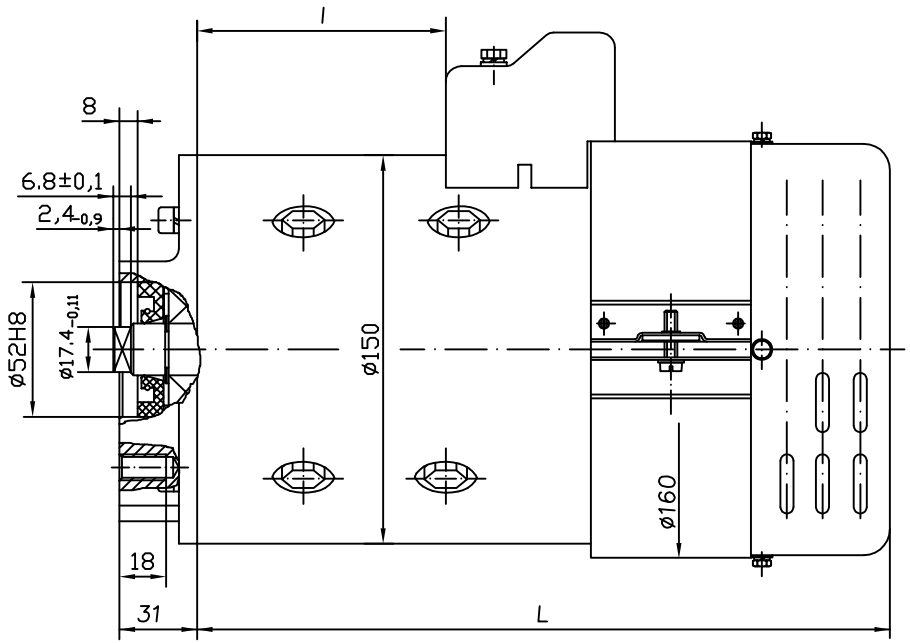

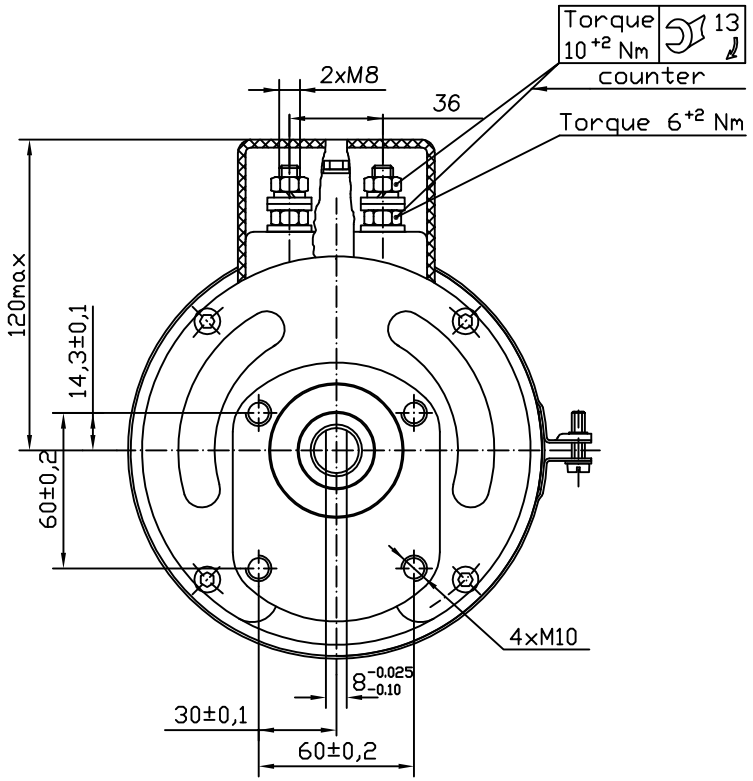

	EC 3,5/2,4/22 0 32 12 2000	EC 4,5/2,4/16-01 0 34 11 6010	EC 4,5/2,4/16 0 34 11 6000	EC 5/2,4/18-01 0 35 11 8010
rated power	3,5 kW	4,5 kW	4,5 kW	5 kW
rated voltage	24 V	24 V	24 V	24 V
rated current	194 A	294 A	294 A	314 A
rated speed	2200 min^{-1}	1600 min^{-1}	1600 min^{-1}	1800 min^{-1}
operation mode	S2-15min	S3-8 %	S3-8 %	S3-8%
excitation	compound	series	series	series
protection	IP 21	IP 21	IP 21	IP 21
insulation	F	F	F	F
weight	-	17,65 kg	17,65 kg	17,36 kg
cann.diag.	fig.2	fig.1	fig.1	fig.1
length L	277	277	277	277
length l	105	105	105	105
char. curve	C24C16	S24C27	S24C27	S24C31
rotation	C.C.W.D.E.	C.C.W.D.E.	C.W.D.E.	C.W.D.E.

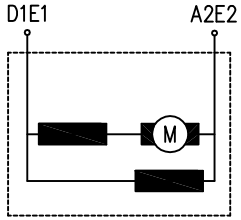

fig. 2

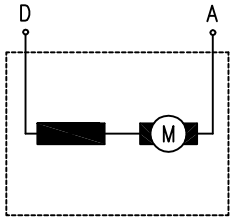

fig. 1

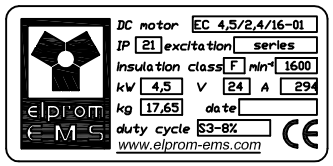

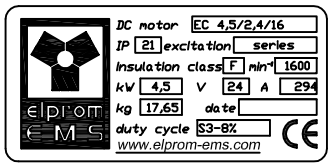

Elprom-EMS

26.10.2006	
21.10.2004	
07.03.2003	
Rev.	